DYNAMIC CALIBRATION KIT
AC-10-0001

Determination of measurement uncertainty related to static operations on a testing machine is relatively easy. Evaluating testing machine performance under dynamic condition is more complex because of the system operations at high frequencies that affect the quality of measured readouts. Reliable fatigue life estimation depends on the quality of the measured specimen deformations and the measured forces from the transducers used, hence dynamic calibration of the test system becomes extremely important for accurate test results. The dynamic calibration kit comprising of an instrumented specimen and a dedicated application software can be used to verify calibration of both force and deformation measurement devices used in fatigue testing. This also complies with standards ASTM E4, ASTM E467 and ISO 4965

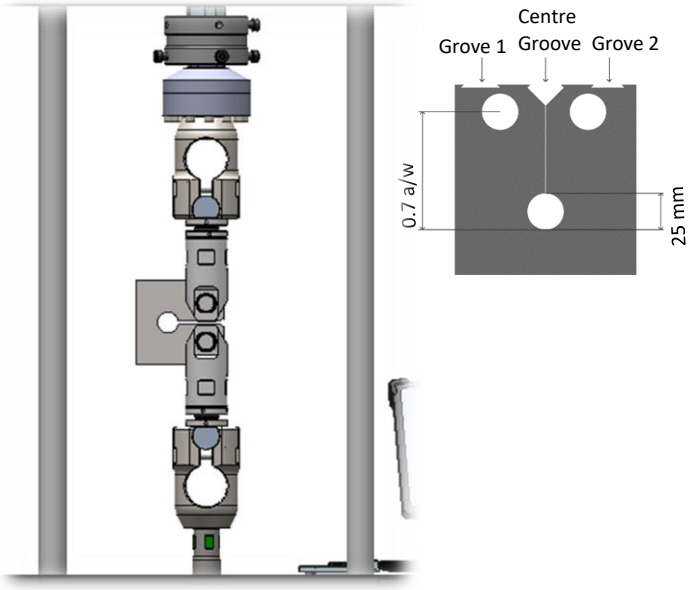

Principle of Verification

A specially grooved and instrumented specimen is pre-calibrated with a known compliance that helps to calibrate the COD and the loadcell of a fatigue test system against static loading. If the difference of measurements of two grooves from COD is 1.0 mm with the accuracy of +/-0.25% then the COD is deemed to be calibrated else needs recalibration.

The instrumented specimen with strain gauges helps for accurate measurements of the loads as experienced by the specimen. The specimen is subjected to maximum tensile load and to have known compliance, it is verified by experimental measurements obtained by applying static load and measuring the corresponding force from master loadcell and deformation from

DYNAMIC VERFICATION REPORT

Date of verification	:	05-09-2023	Location	:	
Customer ID	:				
MACHINE DETAILS					
Machine Name	:		Machine Model	:	UT-01-0025
Machine Serial Number	:				
FORCE TRANSDUCER					
Force Transducer Model	:	AC-06-0035			
Serial Number	:	06 0035 224			
DYNAMOMETER					
Mfg/Model	:	Dynamometer1	Identification	:	Dynamometer1
Type	:	Keyhole	Thickness:		15.0 mm
Width:		100.0 mm			
CONFIGURATION					
Grip Mfg/Model	:				
Grip to Grip	:	0.0 mm			
Grip Type	:	Clevis			

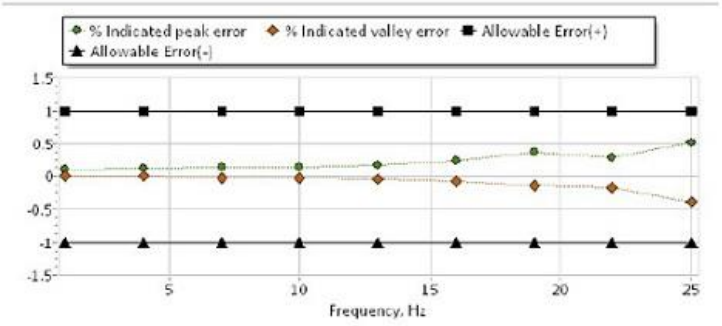

calibrated COD. Using the same load data from master loadcell, the instrumented specimen bridge output is calibrated to precisely represent the same loads.

The static calibration of COD and loadcell follows static verification and calibration of the instrumented specimen such that the bridge output of the instrumented specimen is verified to represent the applied known loads within 0.2% of accuracy across the span of applied loads. After static verification of the instrumented specimen, the dynamic verification of the loadcell is carried out where, the cyclic load is varied between the noted maximum load and minimum load across the swept frequency range of interest for fatigue tests and ensured that measured load span by the loadcell is within 0.3% of accuracy.

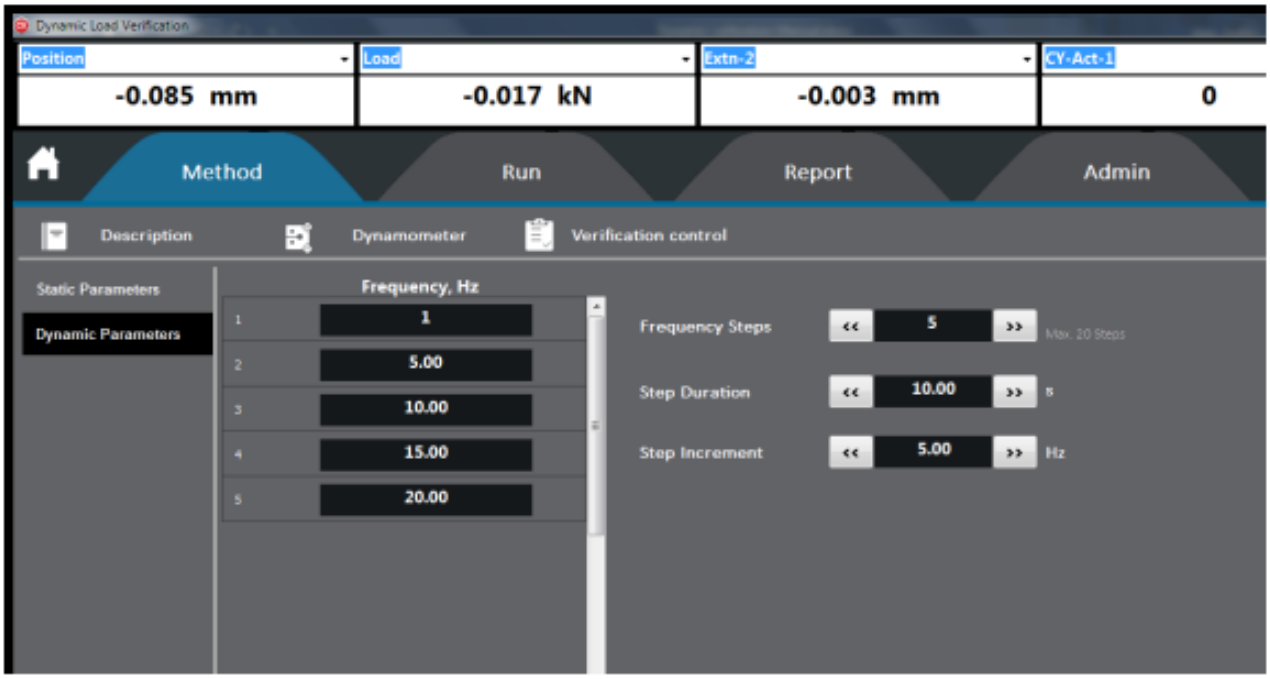

Overview of our dedicated application software with intuitive prompts and dedicated tabs for calibration of COD and loadcell under both static and dynamic loading conditions. The application software has the flexibility to test under 20 multiple steps under various frequencies.

NOTE

Specifications are subject to change without prior notice

Worldwide Headquarters
825 university Ave, Norwood MA 02062 – 2643, USA
Tel: +1 800 564 8378 or +1 781 575 5000

India Headquarters
#497 E, 14th Cross, 4th Phase, Peenya Industrial Area,
Bangalore – 560058, India.
Tel: +91 80 283 60184 Fax: +91 80 283 60047

Instron is a registered trademark of Illinois Tool Works Inc. (ITW). Other names, logos, icons, and marks identifying Instron products and services referenced herein are trademarks of ITW and may not be used without the prior written permission of ITW. Other product and company names listed are trademarks or trade names of their respective companies. Copyright © 2016 Illinois Tool Works Inc. All rights reserved. All of the specifications shown in this document are subject to change without notice.